± .010 inches
[mm] Not to Scale

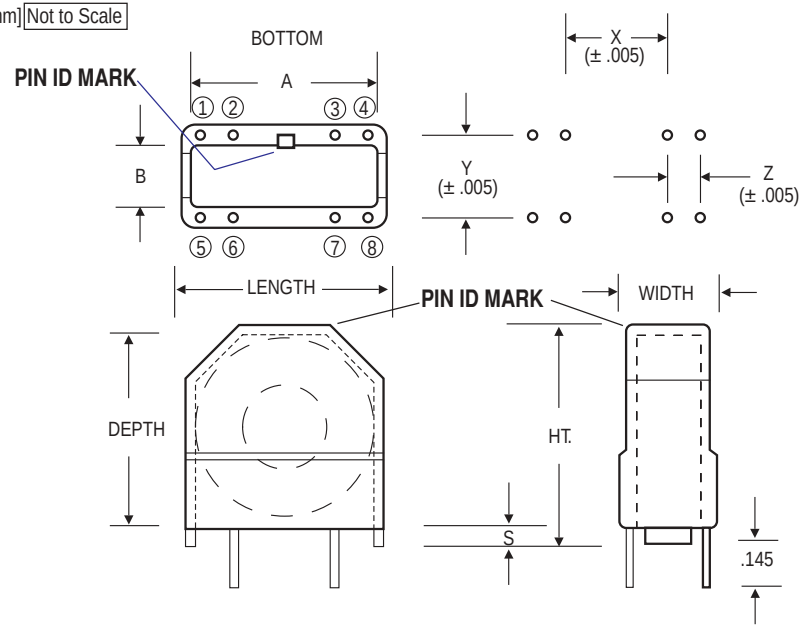

± .010 inches
[mm] Not to Scale

VTC SERIES

Material: Zytel FR50 (Natural)

Rating: UL 94-VO

Terminals: Copper / Zinc
.026 x .026
90/10 Tin Plated

Solderability: Per MIL-STD-202
Method 208

Application: A European standard for enclosed vertical mounting wound toroids from .500 to 1.46 inches in dia. Four terminals in positions 2, 3, 6, 7 is standard. Any terminal pattern can be provided. Example; VTC774-5/12356. (five terminals in positions 1, 2, 3, 5, 6). Anti-static shipping tubes are available for all VTC's but are standard with VTC512 and VTC613.

*Plates available to enclose the bottom of these VTC's which allow for self leading of heavier guage wire. Contact Lodestone Pacific for more information.

PART NO.	LENGTH	WIDTH	A	B	HT.	DEPTH	S	X	Y	Z	TRAY	TUBES
VTC 512-4	.750 [19.0]	.350 [9.0]	.520 [13.2]	.270 [6.85]	.630 [16.0]	.527 [13.4]	.063 [1.6]	.590 [15.0]	.197 [5.0]	—	TY74x77-A	Standard
VTC 613-4	.710 [18.0]	.510 [13.0]	.630 [16.0]	.315 [8.0]	.787 [20.0]	.685 [17.5]	.063 [1.6]	.197 [5.0]	.394 [10.0]	.197 [5.0]	TY85x116-A	Standard
VTC 774-4	.905 [23.0]	.610 [15.5]	.790 [20.0]	.394 [10.0]	.984 [25.0]	.889 [22.6]	.055 [1.4]	.394 [10.0]	.492 [12.5]	.197 [5.0]	TY85x116-A	Standard
VTC 935-4 *Plate Available	1.060 [27.0]	.710 [18.0]	.950 [24.10]	.512 [13.0]	1.180 [30.0]	1.060 [27.0]	.060 [1.50]	.492 [12.5]	.590 [15.0]	.197 [5.0]	TY122x140-A	Optional
VTC 1156-4 *Plate Available	1.260 [32.00]	.710 [18.0]	1.180 [30.0]	.512 [13.0]	1.378 [35.0]	1.240 [31.5]	.080 [2.0]	.492 [12.5]	.590 [15.0]	.295 [7.5]	None	Optional
VTC 1227-4 *Plate Available	1.378 [35.0]	.905 [23.0]	1.30 [33.0]	.669 [17.0]	1.457 [37.0]	1.300 [33.0]	.080 [2.0]	.590 [15.0]	.787 [20.0]	.295 [7.5]	None	Optional
VTC 1468-4 *Plate Available	1.653 [42.0]	1.100 [28.0]	1.555 [39.50]	.846 [21.5]	1.770 [45.0]	1.660 [42.2]	.080 [2.0]	.984 [25.0]	.984 [25.0]	.295 [7.5]	None	Optional